Circuit électrique

IMS 5X120DRV2

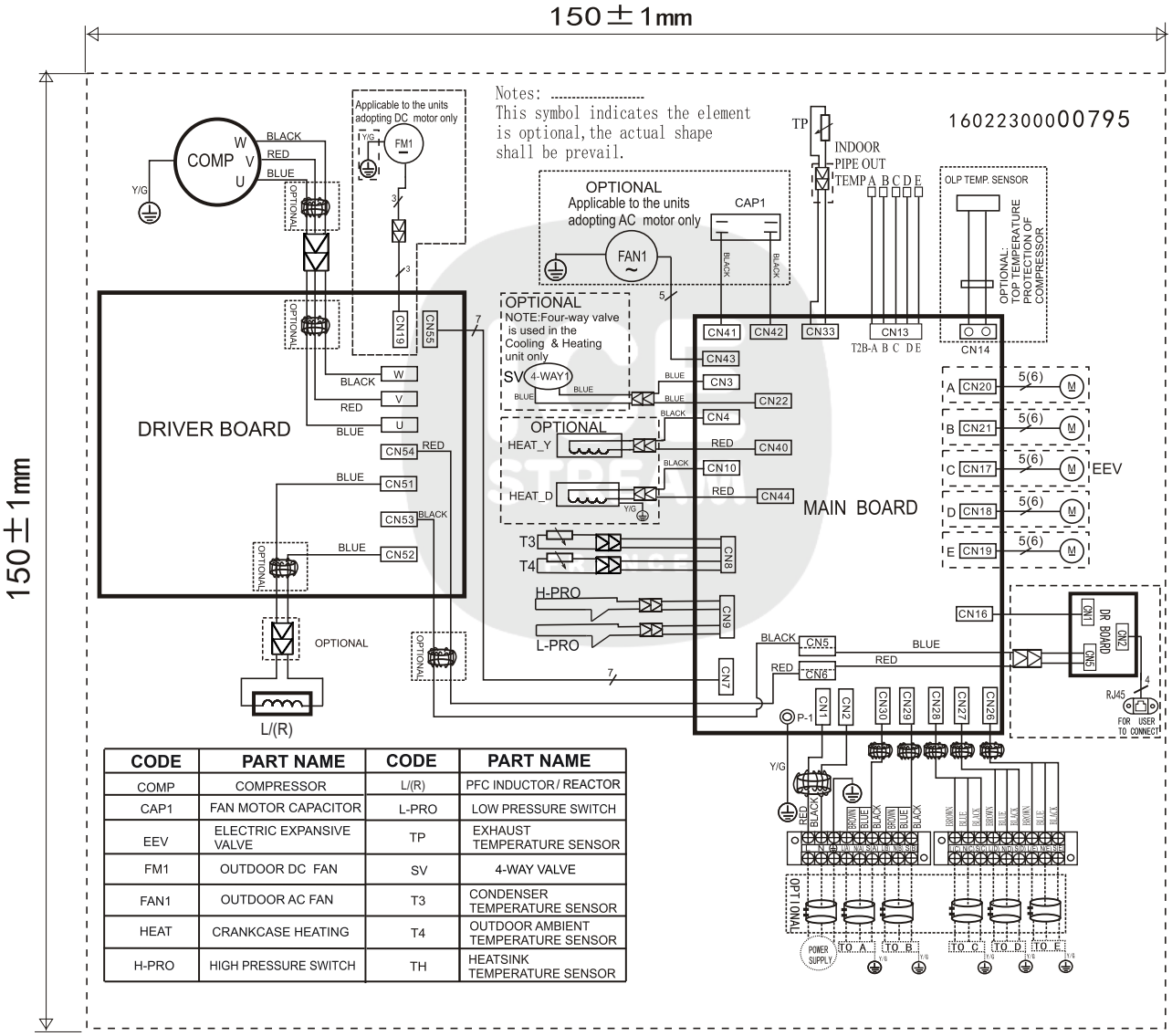

CODE	PART NAME	CODE	PART NAME
COMP	COMPRESSOR	L/(R)	PFC INDUCTOR / REACTOR
CAP1	FAN MOTOR CAPACITOR	L-PRO	LOW PRESSURE SWITCH
EEV	ELECTRIC EXPANSIVE VALVE	TP	EXHAUST TEMPERATURE SENSOR
FM1	OUTDOOR DC FAN	SV	4-WAY VALVE
FAN1	OUTDOOR AC FAN	T3	CONDENSER TEMPERATURE SENSOR
HEAT	CRANKCASE HEATING	T4	OUTDOOR AMBIENT TEMPERATURE SENSOR
H-PRO	HIGH PRESSURE SWITCH	TH	HEATSINK TEMPERATURE SENSOR